www.lockshop.co.za
LockDesk Cellphone:
084-200-1555 (Office Hrs only)
info@lockshop.co.za

THE LOCKSHOP
Everything for Every Door

Distributors of locks, biometrics, panic & emergency exit hardware, door closers, access control equipment and all door & gate hardware

Cnr Silver & Gold Streets
Northgate Estate, Brooklyn
7405 Cape Town.
Tel: +27 (0)21 555-1720

PADLOCKS FOR AFRICA !!!

Padlocks should never be used on any external door or opening, unless they are heavy enough for the job, able to withstand the climatic conditions, and are hung on the appropriate heavy hardware.

Padlocks are available in many shapes and sizes. The most commonly used padlocks have brass bodies and steel shackles, and look like the illustration at right below.

The three measurements usually most relevant when choosing a conventional brass padlock are:

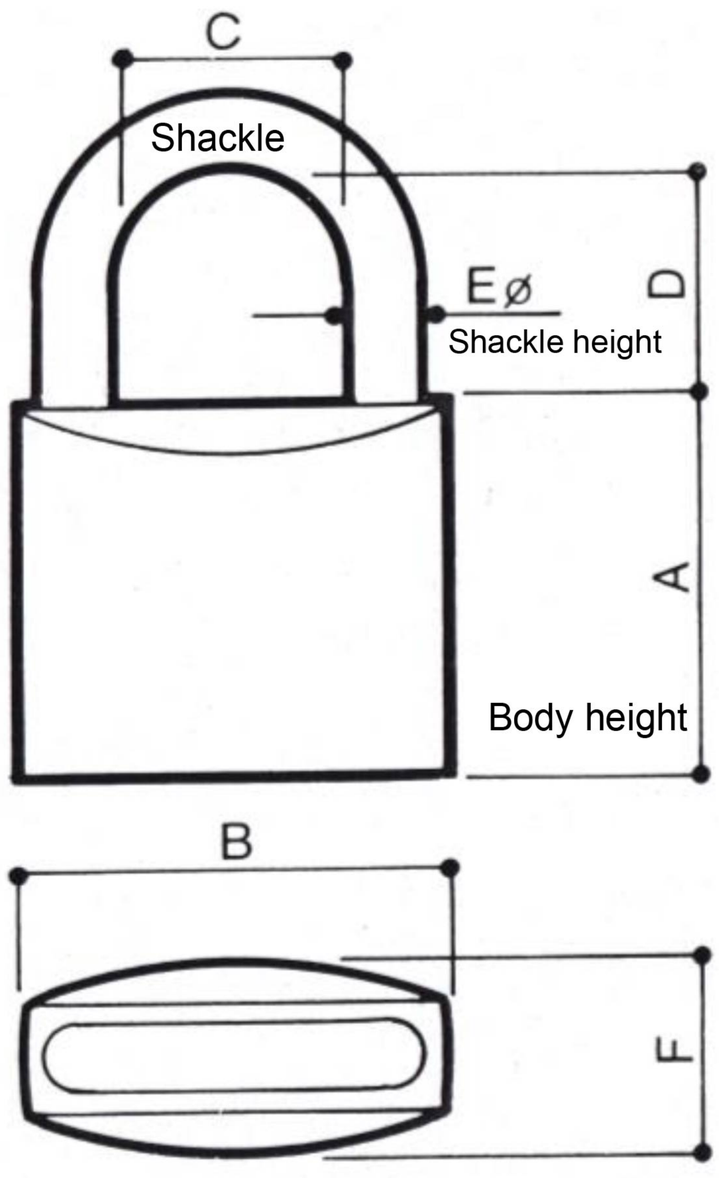

SIZE: The Padlock body is measured from left to right when it is lying flat (most commonly 30 – 60mm) **B**

SHACKLE DIAMETER: Thickness of the shackle – should be at least few millimetres smaller than the hole through which it must pass (usually 6 – 10 mm) **E**

SHACKLE HEIGHT: May be important if there are obstacles through which the shackle must pass, a space limitation, or extra length is required. **D**

Other measurements may be important if there are specific size constraints to the area or hardware onto which the padlock is to be locked, such as the space between the two legs of the shackle **C**

- The shackle is generally the part of the padlock most likely to be attacked.
- Some cheaper padlocks lock only in one position; better padlocks lock in both the 'heel' and in the 'toe' position (i.e. both legs of the shackle are locked)
- Ball locking shackles lock at both heel and toe, and are more resistant to force.

……Shackle ……

Standard & long shackle brass padlocks available with steel or stainless steel shackles

Steel bodied padlock with ball-locking hardened steel shackle

Steel padlock with rolling shackle which resists cutting

It is often easier to attack the hardware on which the padlock is hung; do not assume that your heavy-duty padlock will solve all problems. The hasp or locking hardware must be chosen to suit the weather, the risk, the circumstances and the padlock.

 Copyright David Miller 2019

Prop: D. Miller Sales and Security CC
Reg. No. 1989/007404/23 V.A.T. Reg. No 4070102241
Managing Member: David Miller M.I.S.(SA)
David Miller is a Member of the South African Institute of Security (SAIS)

MEMBER
LOCKSMITHS ASSOCIATION OF SOUTH AFRICA
LASA

CLOSE SHACKLE Padlocks

Armoured Padlock with rolling shackle

Rectangular brass padlocks with rolling shackles
(harder to cut because the shackles roll with the saw)

Steel bodied, double ball-locking padlock with removable (using a key)
and re-keyable cylinder in various grades of key security.

SOLID BRASS PADLOCK FOR REPLACEABLE SINGLE CYLINDER

Features

- Solid brass body
- Nickel-plated carbonitrided steel shackle

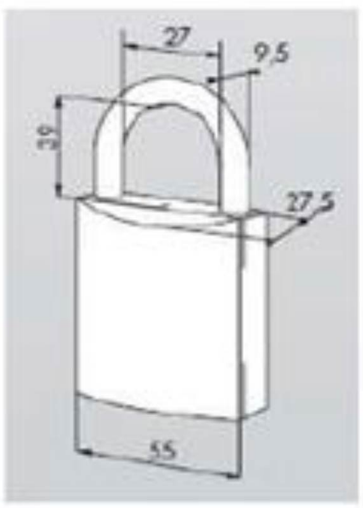

Higher levels of key security are available such as ASTRAL TEKNO S01 and CISA C3000 T06, both of which use registered keys that are made by us, only against authorised signatures.

- **Any padlock is only as secure as the hasp or other device upon which it is hung!**
- **Climate is an important factor – better quality is needed outdoors.**

This information is of a very general nature and is not intended to be all-encompassing.
Ask our Loxperts to advise you – we have 135 years' experience between us!

 Copyright David Miller 2019

Prop: D. Miller Sales and Security CC
Reg. No. 1989/007404/23 V.A.T. Reg. No 4070102241
Managing Member: David Miller M.I.S.(SA)
David Miller is a Member of the South African Institute of Security (SAIS)

MEMBER
LOCKSMITHS ASSOCIATION OF SOUTH AFRICA